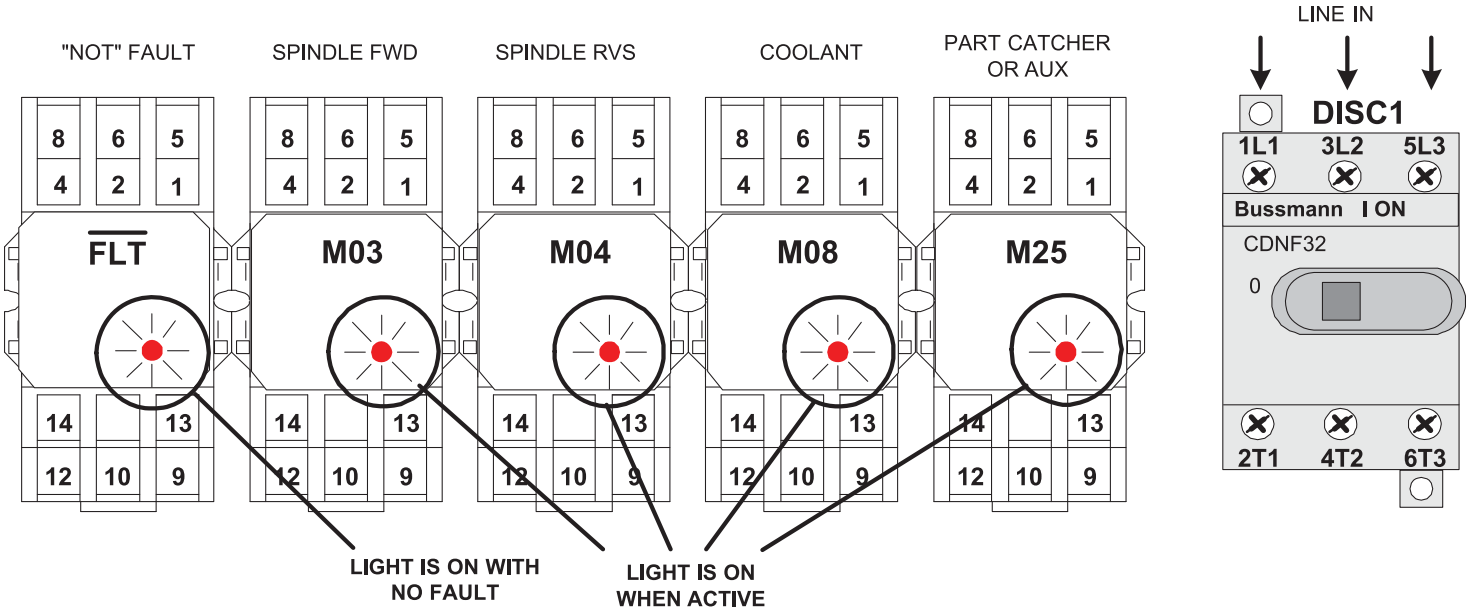

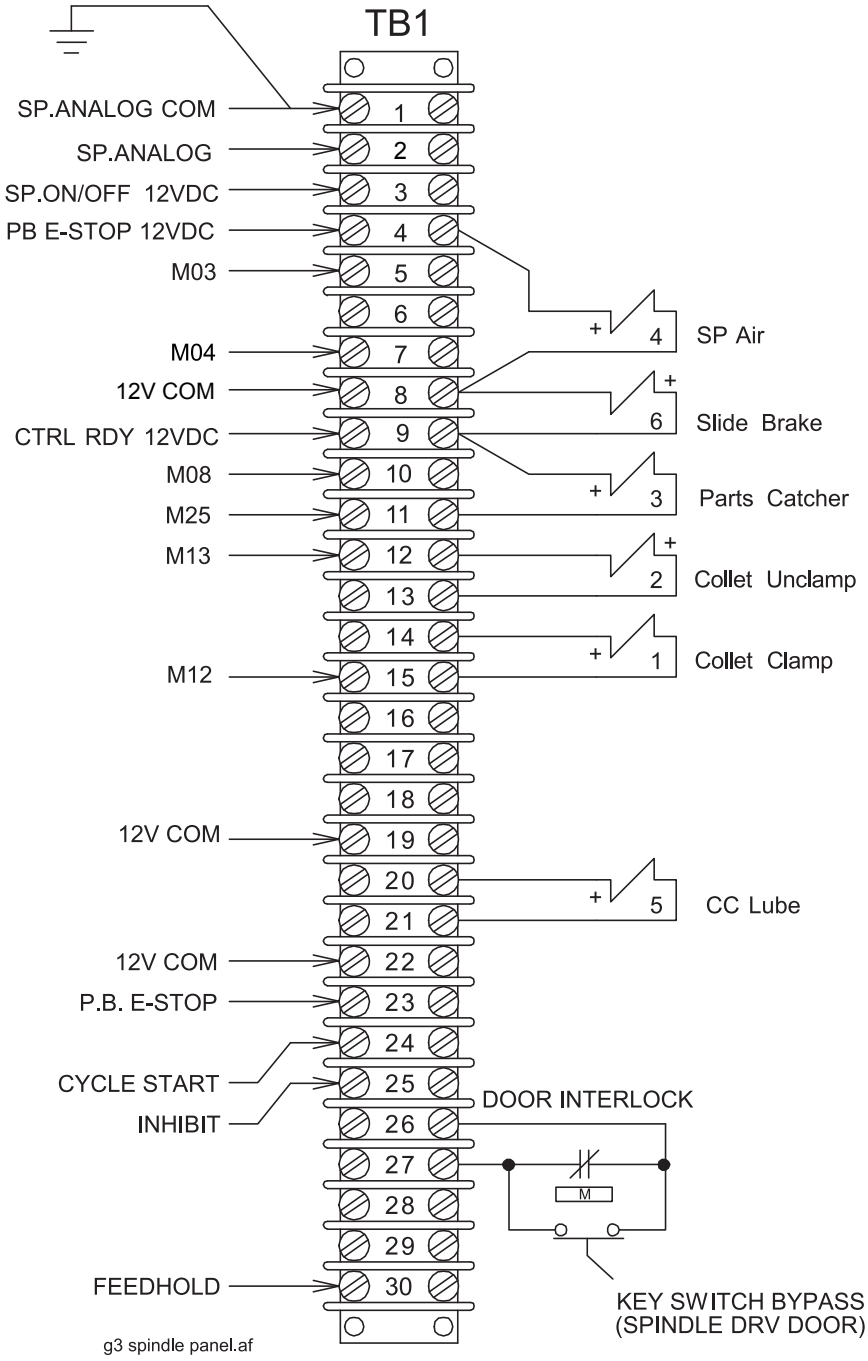

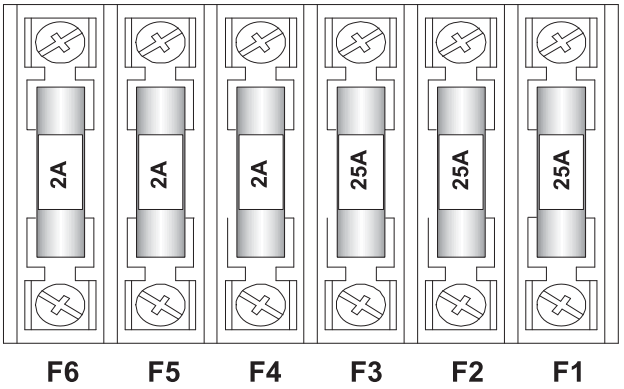

F1,F2,F3 = INVERTER
F4,F5,F6 = COOLANT PUMP

AC SPINDLE DRIVE PANEL JUN2007

OmniTurn